Part Number: WRIMS-232-A3A-3NHBW

- Strip Form Pin
- NO. of Contacts
- Gold A: Flash B: 5u" C: 10u" D: 15u"
- 3: Triple Card Slot
- A: Standard Type
- W: Winning Mark
- B: Brass
- H: High Ejector
- N: Nylon
- 3: Metal Posts

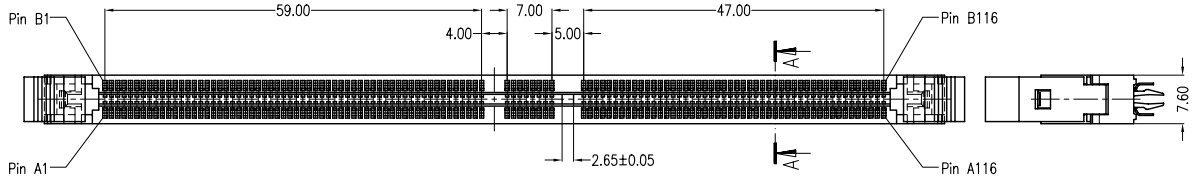

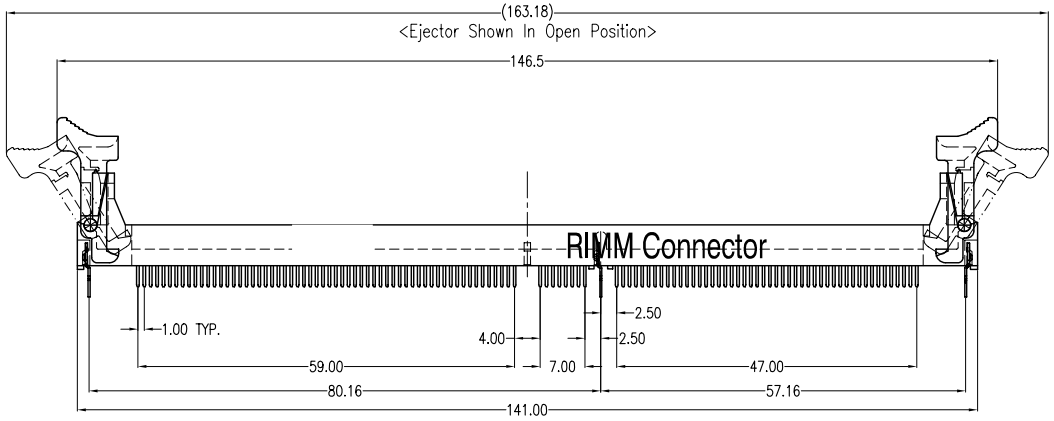

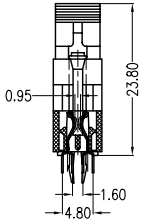

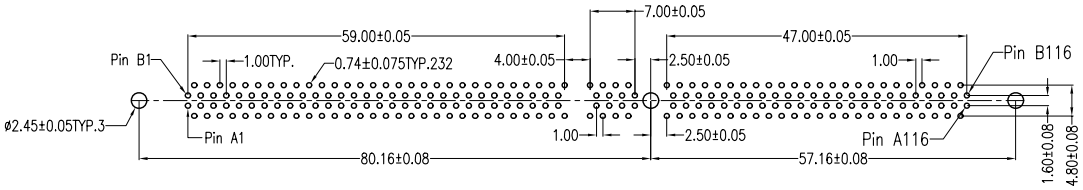

P.C.B. Layout

NOTES:

*Material

Body: Nylon66+20%~30%G.F UL 94V-0 Rated; Color: Black
Ejector: Nylon+20%~30%G.F UL 94V-0; Color: Ivory
Contacts: Copper Alloy
Contacts Plating: Gold Plating Over Nickel On Contacts area Tin/Lead Plating On Te-Rminal

*Mechanical

Contacts Retention: 450 Grams Min.
Insertion Force: 173 Grams Max. Per Mated Pair
Withdrawal Force: 74 Grams Min. Per Mated Pair

*Electrical Specification

Contacts Resistance: 20 Milliohm Max. Initial
Insulation Resistance: 1000 Megohm Min.
Withstand Voltage: 500 VAC
Current Rating: 0.5 Ampere

*Environmental

Operating Temperature: -55°C to +105°C

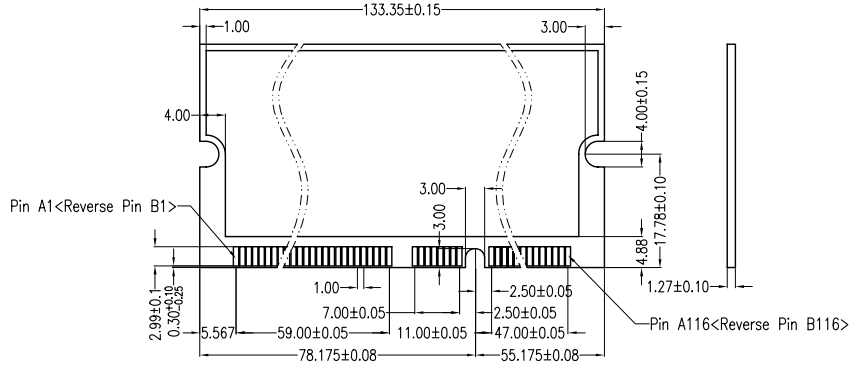

REV					
Units	mm	Scale	1:1	Drawing By	Data
Tolerance Unless Otherwise Specified				Reviewed By	Data
.X ~ ±0.38				Approval By	Data
.XX ~ ±0.25					
.XXX ~ ±0.20					
Angle ~ ± 3°					

Date		Title	RIMM 232 Pins Connector CRT
Sheet	1 of 1		
Third Angle Projection		Drawing No.	W0109041
		F/Name	
			REV