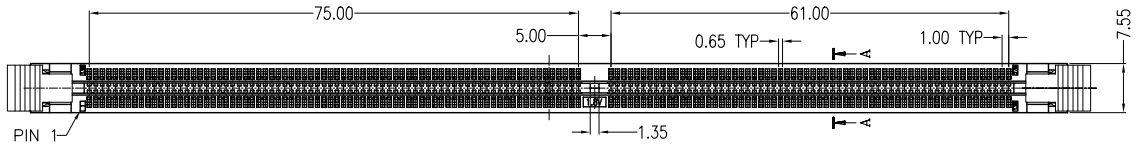

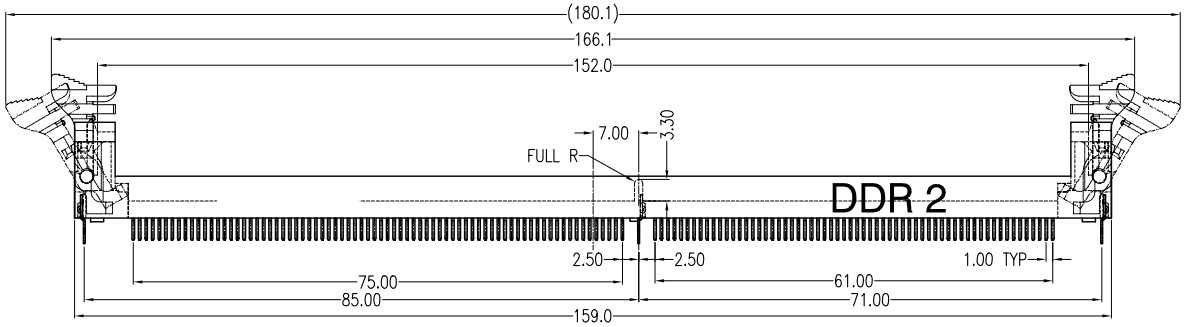

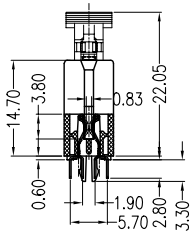

SECT:A-A

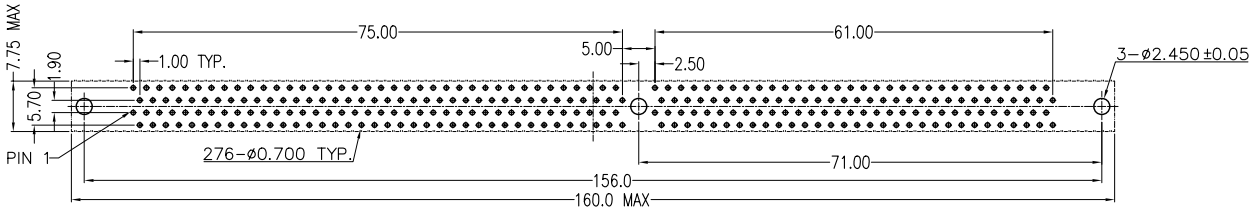

RECOMMENDED CIRCUIT BOARD HOLE LAYOUT

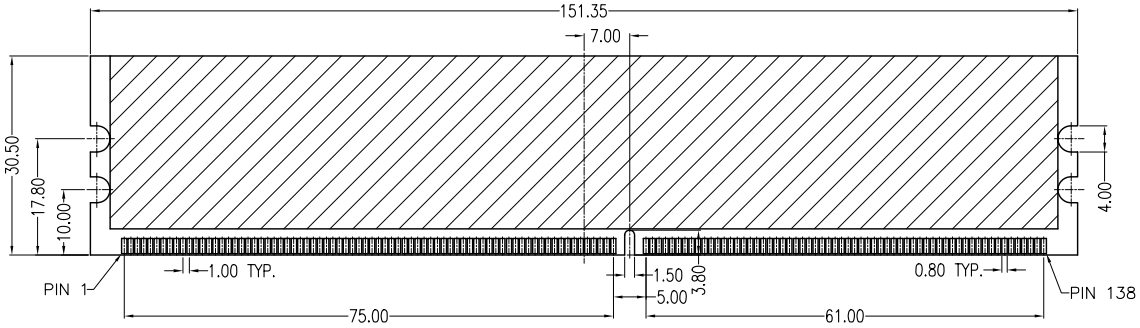

RECOMMENDED MODULE LAYOUT

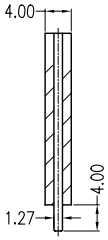

NOTES:

* Material:

Body: Nylon66+G.F20%~30%,Glass Filled UL 94-0 Rated
Color: Black

Ejector: Nylon66+G.F30%, Glass Filled UL 94V-0 Rated
Color: Ivory

Contact: Brass

Contact Plating: Gold Plating Over Nickel On Contact Area
Tin/Lead Plating On Terminal

* Mechanical:

Retention Force-Terminal: 300 Grams MIN. Per
Insertion Force: 35 lb. MAX.
Unmating Force: 14 Grams MIN. Per Pin Pair

* Eelectrical Specification:

Contact Reaistance: 30 Milliohms MAX. Initial
Insulation Resistance: 1000 Megohms MIN. AT 500 VDC
Withstand Voltage: 500 V AC,

* Environmental:

Operating Temperature: -55°C TO +105°C

* How To Order:

WDD2S-276-D1N11B3W

- W: Winning Mark Black:No Mark
- 1: None Post 3: Metal Post
- B: Brass P: Phosphor Bronze
- 1: 1.8V
- 1: Black 4: Blue 6: Red 8: Purple 9: Gray B: Orange
- N: Nylon L: LCP
- 1: Short Pin(2.80mm)
- Gold A: Flash B: 5u" C: 10u" D: 15u" F: 30u"
- NO. of Contacts
- Series NO.

REV					
Units	mm	Scale	1:1	Drawing By	Data
Tolerance Unless Otherwise Specified				Reviewed By	Data
.X ~ ±0.38					
.XX ~ ±0.25				Approval By	Data
.XXX ~ ±0.20					
Angle ~ ± 3°					

Date		Title	DDR2 276P Shield Strip Pin (Metal Posts)
Sheet	1 of 1		
Third Angle Projection		Drawing No.	W031006
		F/Name	
			REV