Pin Type	Interface Dim L	Pin Type	REV	MODIFICATION	DATE	DRAW
Detect	3.5 mm	25,26	B	EN-03-0336	3/24/2003	TONY
General	4.25 mm	All Other Pins	C	EN-05-0510	5/13/2003	TONY
Power	5.0 mm	1,13,38,50				

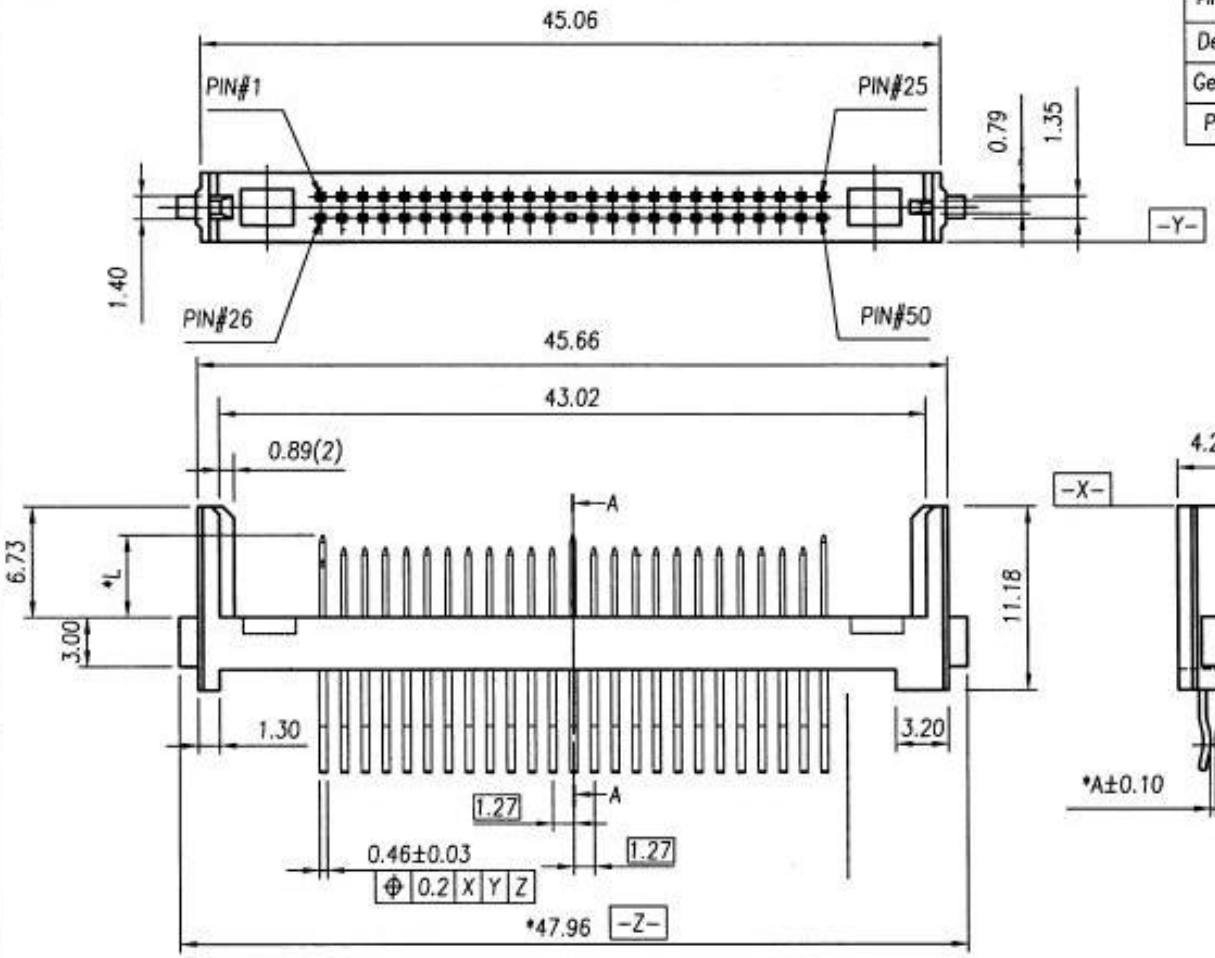

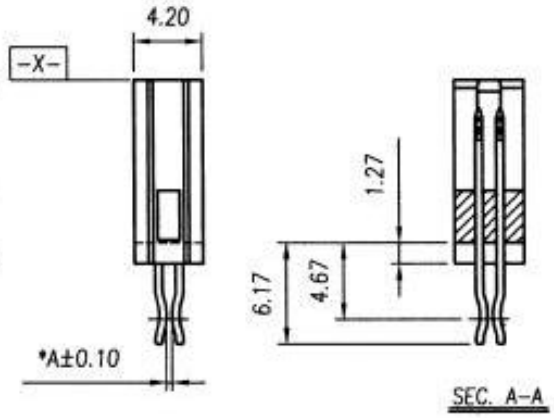

SPECIFICATIONS:

HOUSING : High Temperature Plastic, UL 94V-0
CONTACT : Copper Alloys
VOLTAGE RATING : 100VAC
CURRENT RATING : 0.5A
CONTACT RESISTANCE:40 m Ω max.
INSULATION RESISTANCE:1000M Ω max.
DIELECTRIC STRENGTH : 500VAC/1min
OPERATION TEMPERATURE : -40°C~85°C

CFCMC- 6 50 XX B 00 X

CF STRADDLE MOUNT(A TYPE)

Dim-A
1-0.30 mm
2-0.50 mm

Contact Area Plating:
01-Gold Flash Gold Plating.
05-5U" Gold Plating.
15-15U" Gold Plating.

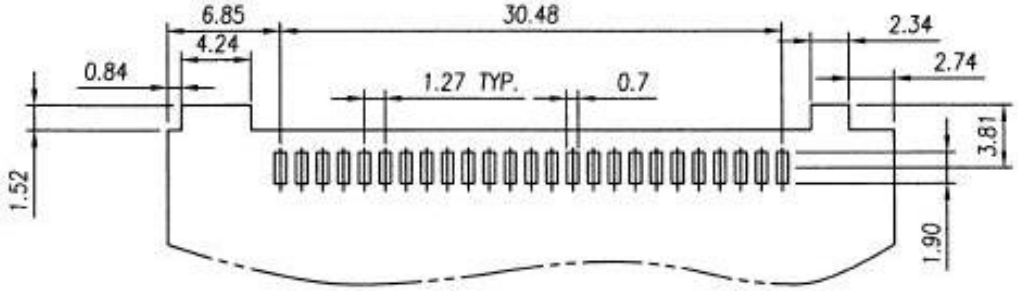

RECOMMENDED P.C.B PATTERN

DIMENSION IN mm [Inch]		PROD. SPEC. SP0049		
TOLERANCE UNLESS OTHERWISE SPECIFIED		PKG. SPEC.	TITLE CF STRADDLE MOUNT (A TYPE)	CUSTOMER DRAWING
.X±0.30	X.°± 1°	APPROVE		
.XX±0.20	.X°± 0.5°	CHECK	FILE NO. KFP-049	DWG NO. CFCMC-650XXB00X
.XXX±0.10	.XX°± 0.25°	DRAW	SIZE A4	PROJ. SHEET 1 / 1
				SCALE 2:1 REV C