REV.	ECN NO	LOCATIONS	DESCRIPTION	DATE	REVISER	APPD

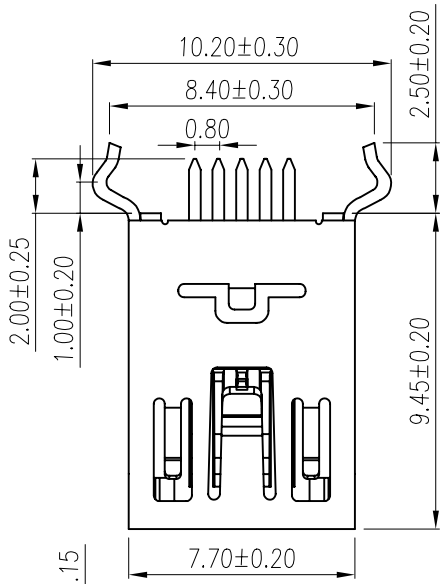

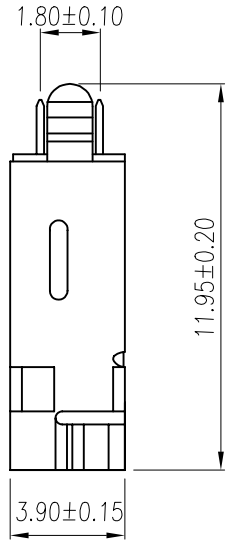

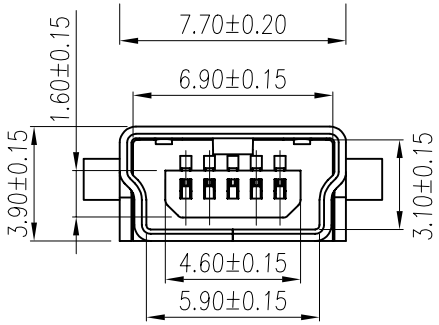

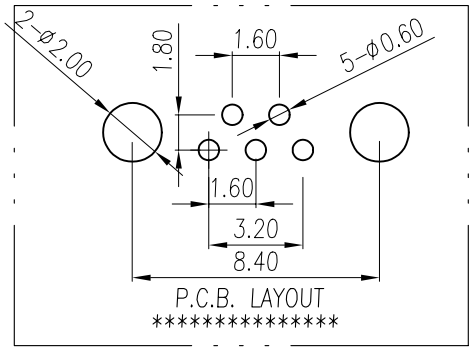

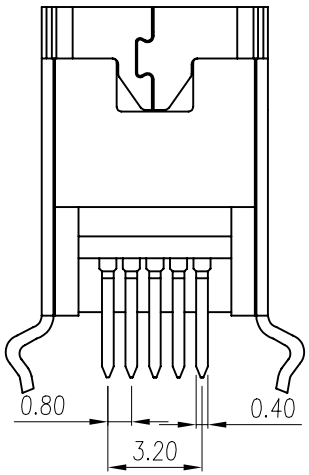

Note:

1.Material:

1.1 Insulator: PA6T UL 94-V0 rated.
1.2 Contact: Phosphor bronze,t=0.25mm.
1.3 Shell: Phosphor bronze,t=0.40mm.

2.Specification:

2.1 Current rating: 1 A Max.
2.2 Dielectric withstanding voltage: 500 V(ac) for 1 minute.
2.3 Contact resistance: 30 mΩ Max.
2.4 Insulation resistance: 1000 MΩ Min at DC 500V.
2.5 Total mating force: 29.4Newtons Max.
2.6 Total unmating force: 4.9Newtons Min.
2.7 Temperature range: -55°C~+105°C

3.Finishes:

3.1 contacts:Gold flashed 1u",3u",5u",10U",15u",30u".
3.2 shell:Nickel or Tin plated.

No.	Name	Q'ty	Material	Remarks & Thickness	Finish
3	Shell	1	Phosphor bronze	T=0.40mm	Nickel or Tin Plated
2	Contact	5	Phosphor bronze	T=0.25mm	Gold Flashed
1	Housing	1	PA6T	UL 94-V0	Black

PART NO:		MATERIAL:	
MODEL NO:		FINSH:	
UNIT: mm	SIZE: A4	COLOR:	PART NAME: MINIUSB-5PIN B (F) 180° DIP
TOLERANCE UNSPECIFIED .x ±0.3 .xx ±0.20 .xxx ±0.100 ANG. ±1°		DR: 李霞 '06/04/20 CHK: Kevin '06/04/20 APP: Kent '06/04/20	DWG NO: S/A-316 REV: A0 SCALE: 4:1 SHEET: 1 of 1