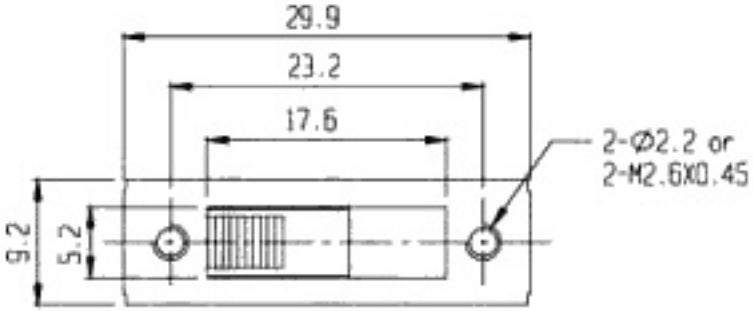

SCHEMATIC

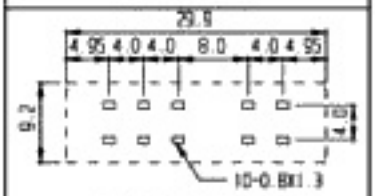

PCB LAYOUT

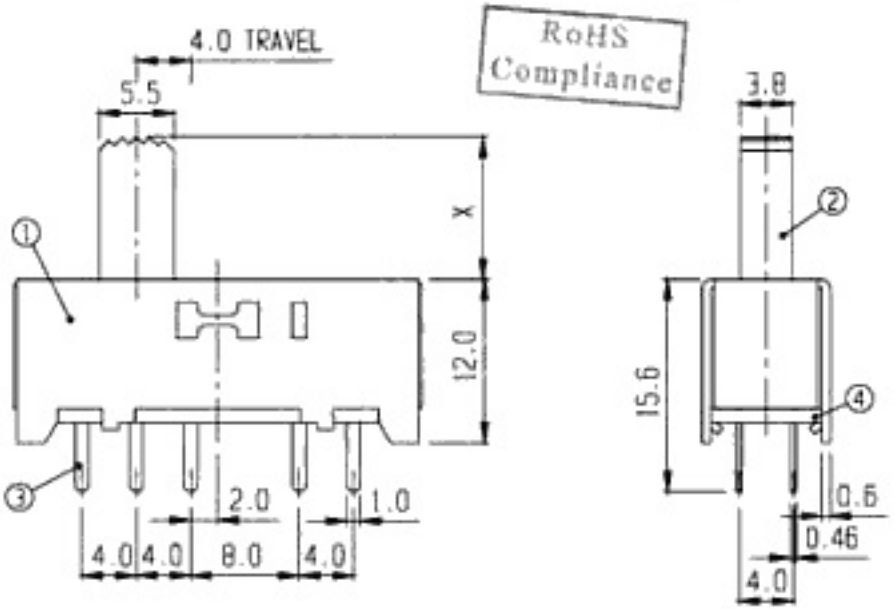

NO	PART	MATERIAL	QTY	REMARKS	NO	PART	MATERIAL	QTY	REMARKS
7	SPRING	STEEL WIRE	1						
5	CONTACT	P B S	2	Ag PLATED	6	BALL	STEEL	2	
3	TERMINAL	BRASS	10	Ag PLATED	4	TERMINAL BASE	PHENOL RESIN	1	NATURAL
1	FRAME	S P C C	1	Ni PLATED	2	KNOB	P O M	1	G 3-15

ISSUED	SPECIFICATION	TITLE: SLIDE SWITCH (2P4T)			
	RATING: DC 30V 0.5A CONTACT RESISTANCE: 30mΩ max.	MODEL NO: SS-24H02 (G)			
	INSULATION RESISTANCE: 500MΩ at 500V DC	TOLERANCE	UNIT: MM	DWN.	
	WITHSTAND VOLTAGE: AC 500V for 1 minute	UP TO 1.0:±0.1	SCALE: 2:1	CHK'D.	
	OPERATION FORCE: REFER ATTACH SPECIFICATION	1.0 TO 10.0:±0.2	VERSION: 01		
	SWITCHING LIFE: 10K cycles min.	OVER 10.0:±0.3	DRWG NO:	APPD.	